Demonstrating crystal optics using microwaves on wood targets

Benjamin S. Perkalskis and J. Reuben Freeman
Department of Science Teaching, Jerusalem College of Technology, Jerusalem, Israel

(Received 13 June 1994; accepted 22 February 1995)

Demonstrating crystal-optics effects by conventional means poses many difficulties. Large crystals are not readily available; cutting and polishing crystal plates and prisms with various optic axis directions is not easy. Even when the crystal system is complete, there remains the pedagogic problem that the optic axis is not visually apparent—the observer does not see directly the relative orientation of the optic axis, the crystal surfaces, and the direction of polarization of the incident beam.

We outline here a simple yet amazingly effective means for demonstrating crystal optics that overcomes these difficulties: *use of a microwave beam on natural wood targets.*[1]

Plates or wedges of dry, straight-layer wood behave optically like positive uniaxial crystals with a substantial linear birefringence lying between 0.1 and 0.2 depending on the wood sample. The wood fiber axis **f** is the optic axis and so is readily visible. It has an infinite order of symmetry because rotation about the fiber axis leaves the wood configuration invariant. Pine or cedar targets from the same log can easily be cut with different orientations of the fiber axis. A typical wood plate is 25 cm by 25 cm with a uniform thickness of between 3 and 20 cm.

Microwaves of wavelength $\lambda=3.2$ cm can be generated by a klystron tube or Gunn diode and modulated by a low frequency wave. The emitter and detector horns should be rectangular with typical window dimensions 8 cm by 10 cm. The electric field polarization for each horn is perpendicular to the longer window edge and this direction can be made visible by a pointer stick attached to each horn. The detected signal is amplified and displayed on an oscilloscope. The angle between the emitter polarization direction and the detector polarization direction should be adjustable about the transmission axis.

The art is in judiciously choosing a series of targets that elucidate the essentials of birefringence. The following sequence of demonstrations is useful.

With no target, align both horns along a common transmission axis **z**, so their respective polarizations are parallel to the vertical **x** axis. The signal is maximal. Rotate the receiver horn about the **z** axis. The detected amplitude decreases (à la Malus) until there is a null result at crossed polarizations. Now introduce a wood plate (25 cm by 25 cm by uniform thickness "*t*") perpendicular to the incident beam and check for deviation from the null signal. A typical configuration is shown in Fig. 1

The plane formed by the incident propagation direction and the optic axis (the fiber axis **f**) is called the "principal plane." The electric field for the ordinary (extraordinary) wave oscillates perpendicular (parallel) to the principal plane.

Start with a plate (shown in Fig. 2) whose fiber axis, $\mathbf{f}_1$, is parallel to the incident beam axis, **z**. Every plane containing **z** is a principal plane so the waves in the wood are entirely extraordinary and emerge polarized parallel to the incident polarization. Thus the detector continues to register a null result. Clearly, rotating the plate about the **z** axis changes nothing; neither does tilting the plate forward by a rotation about the **y** axis—the principal plane is still vertical (parallel to the **x**–**z** plane) and only an extraordinary wave traverses the wood. Nor is the null result affected by tilting the plate sideways through a rotation about the **x** axis—the principal plane is horizontal and only an ordinary wave traverses the wood emerging with a polarization direction at right angles to that of the detector.

Tilting the plate so the principal plane is neither perpendicular nor parallel to the incident polarization does yield a positive signal as both extraordinary and ordinary waves come into play, but in a nontrivial fashion.

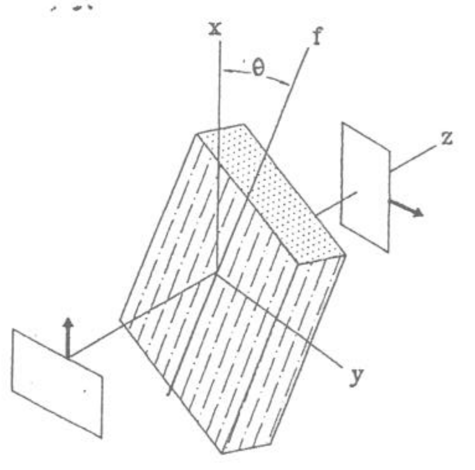

g. 1. A wood plate of thickness "t" between the horn windows of a crowave emitter and detector with crossed polarizations. The fiber axis **f** s in the x–y plane and makes an angle "θ" with respect to the emitter larization.

A simpler example is provided by a plate (shown in Fig. 1) whose fiber axis lies in the vertical (**x**–**y**) plane and makes an ngle θ with the incident polarization vector. For $\theta=0$, there is no signal but as the plate is rotated about the **z** axis, the signal grows, reaching a maximum in the vicinity of $\theta=45°$, then falling back down to zero as θ reaches 90°. The explanation is straightforward: when $\theta=0°$ ($\theta=90°$) only an extraordinary (ordinary) wave traverses the wood emerging with a polarization parallel to the **x** axis. For intermediate angles, the wave in the wood is a superposition of orthogonally polarized, oscillating (ordinary and extraordinary) electric fields whose amplitude ratio is tan θ.

The polarization of the emerging wave depends on the relative phase difference δ between the two orthogonal components (each of which has been optically retarded by a different amount):

$$\delta=(2\pi/\lambda)t(n_e-n_o)\text{rad}, \tag{1}$$

where n_e is the principal index of refraction of the extraordinary wave and n_o is the ordinary index of refraction. In general, the emerging beam is elliptically polarized.

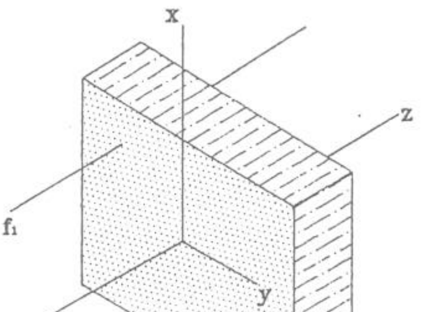

Fig. 2. A wood plate with fiber axis $\mathbf{f}_1$ parallel to the incident beam direction **z**.

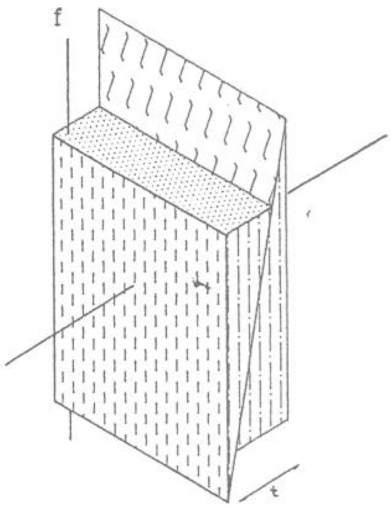

Fig. 3. Two wedges with a common fiber axis combined to make a plate of variable thickness t.

To produce circular polarization the plate thickness must be adjusted so that $\delta=90°$ and the orthogonal electric fields have the same amplitude. A variable thickness plate can be made from two wedges (length 40 cm by width 20 cm by base 5 cm) with a common fiber axis (see Fig. 3). Orient the composite system so that $\theta=45°$. Vary the "plate" thickness until rotating the detector horn about the **z** axis produces no change in the signal strength. Once this thickness, "t_c," is found, then a single plate can be cut to replace the two wedges. This is a quarter-wave retarder plate.

The absolute value of the birefringence index, $|n_e-n_o|$ can now be calculated from Eq. (1). We find for our pine sample that $t_c \cong 5.5$ cm so that the birefringence index is about 0.15.

A half-wave retarder plate can be easily cut (with thickness $2t_c$). Setting the fiber axis so that $\theta=45°$ (see Fig. 1) yields an emerging wave whose polarization is perpendicular to the incident polarization. Thus the signal will be maximal when the detector and emitter polarizations are crossed.

Keeping the principal plane either parallel or perpendicular to the emitter polarization prevents a spatial separation between the ordinary and extraordinary wave. To achieve a separation, use a thick (>15 cm) plate (as shown in Fig. 4) whose fiber axis $\mathbf{f}(\varphi)$ makes an angle $\varphi=45°$ with the normal to the plate face. The ordinary wave exits straight along the **z** axis but the extraordinary wave is refracted upwards. To "see" this, move the detector to where the signal is maximum for a polarization parallel to the principal plane. This is not where the signal is a maximum for a polarization perpendicular to the principal plane. Since the incident beam is not thin, there is considerable overlap between the ordinary and extraordinary components of the emerging wave. It is, therefore, useful to search for the maximum signal with a much smaller detector—say a half-wave dipole with a detector in its gap.

To quantitatively examine the spatial separation for ordinary and extraordinary waves, use the following novel method: construct a double-aperture Young's apparatus for microwaves by fixing a sheet of aluminum foil with two circular holes (6 cm diam with centers separated by 10 cm) onto a styrofoam slab or by cutting two holes in a rigid metal

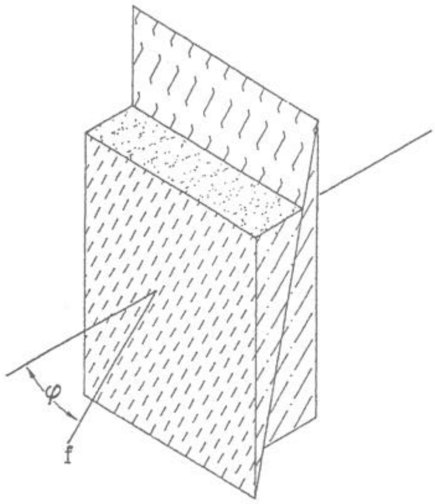

Fig. 4. A wedge pair with fiber axis that makes an angle φ with the normal to the plate face.

sheet. Place the Young's apparatus between the emitter and receiver so the receiver records the signal at the central interference maximum. Use a wedge pair (as in Fig. 3) with fiber axis parallel to the incident polarization to cover one of the apertures. The optical retardation by the wood shifts the interference pattern. Vary the wedge-pair thickness to "t_1" for which the receiver signal corresponds to the first interference minimum. Thus an optical path difference of half a wavelength has been achieved between the routes through the two apertures. Since the emerging beam is entirely extraordinary,

$$(n_e - 1)t_1 = \lambda/2 \tag{2}$$

we can determine n_e. Repeating this procedure but with the fiber axis of the wedge pair perpendicular to the incident polarization (i.e., $\theta = 90°$) allows the determination of n_o.

This method can be generalized to variable thickness plates whose fiber axis makes an angle φ with the normal to the target plane as shown in Fig. 4. Now the extraordinary index of refraction $n_e(\varphi)$ can be determined from the plate thickness $t(\varphi)$ needed to shift the central interference maximum to the first interference minimum via

$$[n_e(\varphi) - 1]t(\varphi) = \lambda/2. \tag{3}$$

Devices (compensators, retarders, polarizers, beam splitters) made from combining birefringent prisms with different optic axis orientations can be constructed for microwave beams from wood components. Details will be reported separately.

We thank Boris Lichtrav for his assistance with the microwave apparatus.

---

[1] See also B. Sh. Perkalskis, *Wave Phenomena and Physics Demonstrations* (Tomsk University Press, Tomsk, 1984). (In Russian).

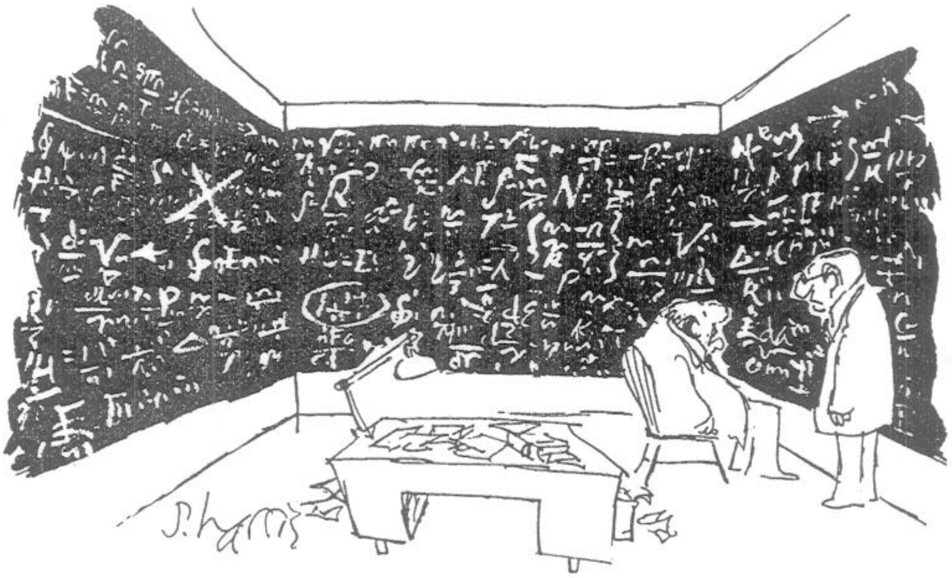

"Whatever happened to *elegant* solutions?"

From *Chalk Up Another One: The Best of Sidney Harris* by Sidney Harris. Copyright © Sidney Harris. Published by AAAS Press, Washington, D.C., p. 86. Used with permissio